DE/
EN

Ark-Accessories-RAM

für/for ArkCam Smart & Basic+
& für/for ArkCam Basic+ mini

Produktvarianten / Product variants			
3310022	Ark-ACC-RAM-Set 1	▪ RAM-Mount Gelenklänge 15,3cm	▪ RAM-Mount Joint length 15,3cm
3310032	Ark-ACC-RAM-Set 2	▪ RAM-Mount Gelenklänge 9,4cm	▪ RAM-Mount Joint length 9,4cm
3310033	Ark-ACC-RAM-Set 3	▪ RAM-Mount Gelenklänge 6,15cm	▪ RAM-Mount Joint length 6,15cm
3310067	Ark-ACC-RAM-Set 7	▪ RAM-Mount Gelenklänge 9,4cm	▪ RAM-Mount Joint length 9,4cm

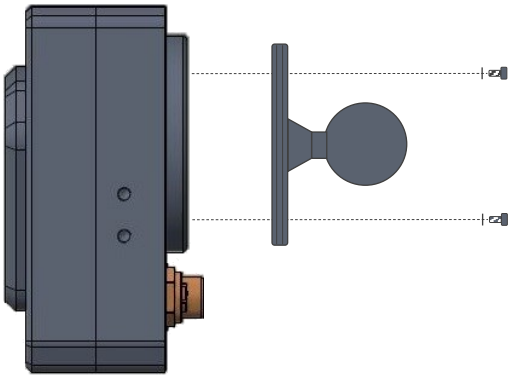

Produktvarianten / Product variants

3310022	Ark-ACC-RAM-Set 1	▪ RAM-Mount Gelenklänge 15,3cm	▪ RAM-Mount Joint length 15,3cm

RAM Set 1

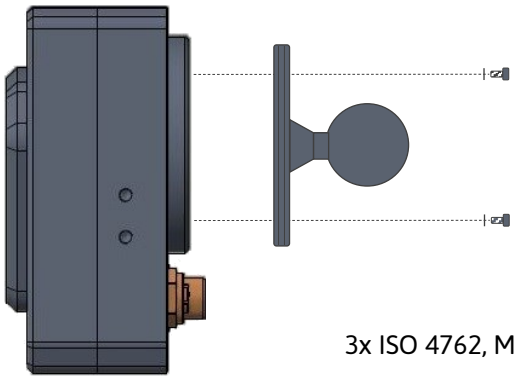

3x ISO 4762, M5x10, A2 inkludiert/included

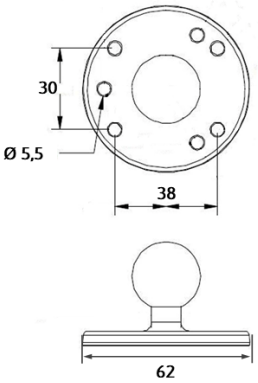

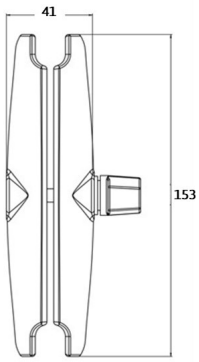

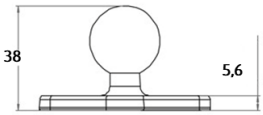

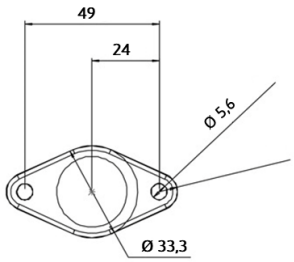

Produktvarianten / Product variants

3310032	Ark-ACC-RAM-Set 2	▪ RAM-Mount Gelenklänge 9,4cm	▪ RAM-Mount Joint length 9,4cm

RAM Set 2

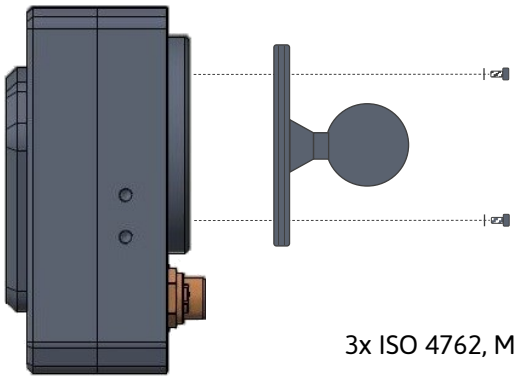

3x ISO 4762, M5x10, A2 inkludiert/included

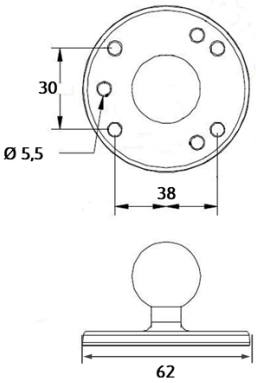

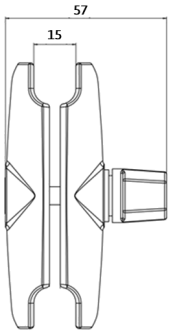

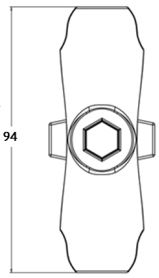

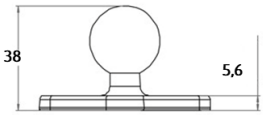

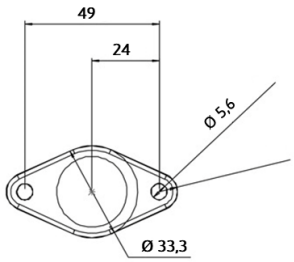

Produktvarianten / Product variants

3310033	Ark-ACC-RAM-Set 3	▪ RAM-Mount Gelenklänge 6,15cm	▪ RAM-Mount Joint length 6,15cm

RAM Set 3

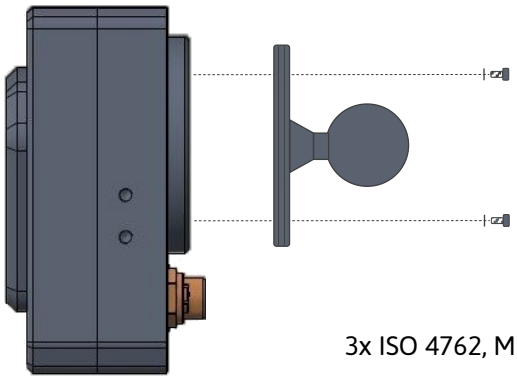

3x ISO 4762, M5x10, A2 inkludiert/included

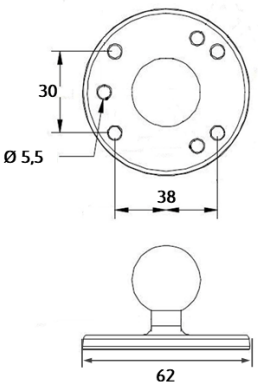

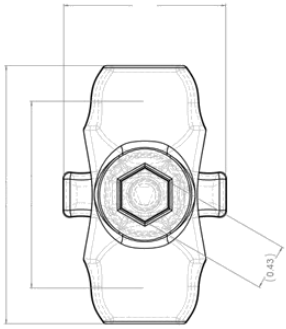

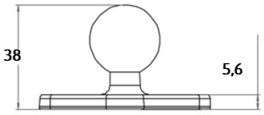

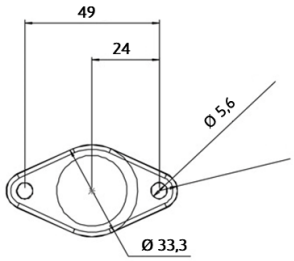

Produktvarianten / Product variants

3310067	Ark-ACC-RAM-Set 7	▪ RAM-Mount Gelenklänge 9,4cm	▪ RAM-Mount Joint length 9,4cm

RAM Set 7

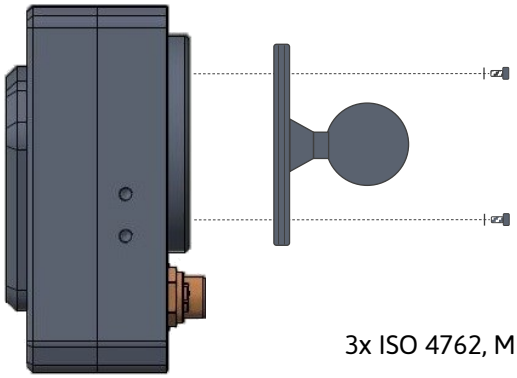

3x ISO 4762, M5x10, A2 inkludiert/included

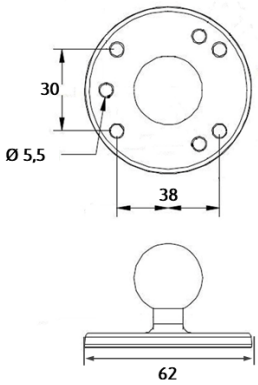

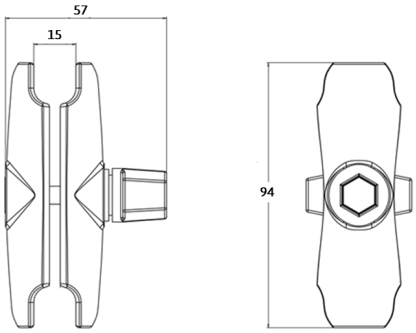

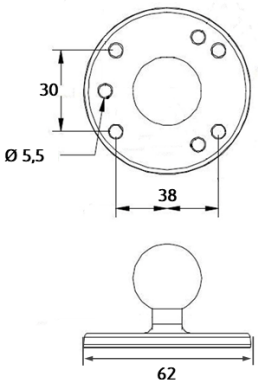

Ark Vision Systems GmbH & Co. KG
Limburger Str. 51
35799 Merenberg-Allendorf
Germany

Tel: +49 (0) 6471-508702 0
E-Mail: info@ark-vision-systems.com
Homepage: www.ark-vision-systems.com

26. Januar 2024
Rev.: 01/2024
© Ark Vision Systems 2024